GLACIER ONE M25LCD

INSTALLATION GUIDE

Installationsanleitung | Guide d'installation | Guía de instalación | 安装指南

Ausführung | Version | Versión | 版本 | Version 1.0

THIS MANUAL IS FOR THE FOLLOWING MODELS

Dieses Handbuch gilt für die folgenden Modelle | Ce manuel concerne les modèles suivants | Este manual es para los siguientes modelos | 此手册适用于以下型号

Model Nr.	Product Name	Color
PH-GO360M25G2LCD_DBK01	Glacier One 360M25 LCD	Black
PH-GO360M25G2LCD_DWT01	Glacier One 360M25 LCD	White

LEGEND

Legende | Légende | Leyenda | 说明

- Remove | Entfernen | Retirer | Eliminar | 移除
- Install | Installieren | Installer | Instalar | 安装
- Loosen | Lösen | Desserrer | Aflojar | 拧松

EN Phanteks will not take responsibility for any damages incurred due to incorrect installation or usage of this product.

DE Phanteks übernimmt keine Verantwortung für Schäden, die durch eine falsche Installation oder Verwendung dieses Produkts entstehen.

FR Phanteks décline toute responsabilité en cas de dommages résultant d'une installation ou d'une utilisation incorrecte de ce produit.

ES Phanteks no se responsabilizará de los daños ocasionados por la instalación o el uso incorrectos de este producto.

CN Phanteks 不会对安装中失误造成的任何损失负责，请仔细阅读本手册。

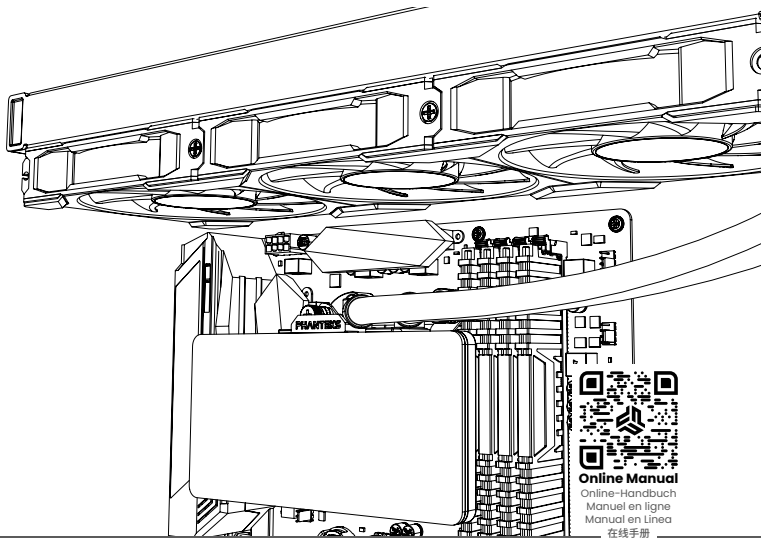

Online Manual
Online-Handbuch
Manuel en ligne
Manual en Linea
在线手册

SCOPE OF DELIVERY

Lieferumfang | Contenu de la livraison | Alcance de la entrega | 配件清单

MAIN COMPONENTS

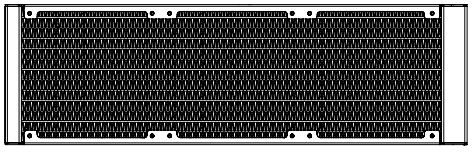

Radiator
Including Pump Module
x1

LCD6-HD Module
x1

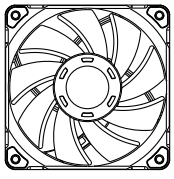

M25G2 Fan[1]
Pre-connected
x3

MOUNTING HARDWARE

Montagezubehör | Le matériel de montage | Accesorios de montaje | 安装硬件

Intel 115X | 1200 Stand-off
x4

Radiator Screws
6 mm | 6-32 UNC
x12[1]

Intel 1700 | 1851 Stand-off
x4

Radiator Screws
30 mm | 6-32 UNC
x12[1]

AMD Adapter Bracket
x2

Thumb Nuts
x4

Intel 115X | 1200 | 1700 | 1851 Backplate
x1

Intel Bracket
Pre-installed
x1

ACCESSORIES

Zubehör | Accessoires | Accesorios | 配件

USB to Type-C Cable
600 mm
x1

Screw Cover Corners
Left | Right
x2[1] | x2[1]

LINQ6 Extension Cable
500 mm
x1

Screw Cover Bridge
x4[1]

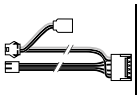

LINQ6 Adapter
500 mm
x1

Tube Clips
x3

ATTENTION
The maximum clearance for the RAM modules is 59 mm in height.

D-RGB LIGHT DIRECTION

D-RGB-Lichtrichtung | Direction de la lumière D-RGB | Dirección de la luz D-RGB | D-RGB灯方向

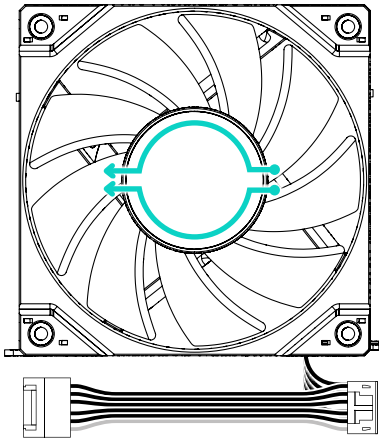

THE D-RGB LIGHT DIRECTION STARTS FROM THE CONNECTOR SIDE ON THE FAN.

Die D-RGB-Lichtrichtung beginnt auf der Anschlussseite des Lüfters.

La direction de l'éclairage D-RGB commence du côté du connecteur sur le ventilateur.

La dirección de la luz D-RGB comienza desde el lado del conector del ventilador.

D-RGB 灯光方向从风扇上的连接器侧开始。

[1]Quantity may vary on radiator size.
Die Menge kann je nach Heizkörpergröße variieren.
La quantité peut varier selon la taille du radiateur.
La cantidad puede variar según el tamaño del radiador.
数量可能根据散热器尺寸而变化。

[2]Follow mainboard manual for instructions on D-RGB control.
Befolgen Sie für Anweisungen zur D-RGB-Steuerung das Motherboard-Handbuch.
Suivez le manuel de la carte mère pour obtenir des instructions sur le contrôle D-RGB.
Siga el manual de la placa base para obtener instrucciones sobre el control D-RGB.
参考主板说明书了解D-RGB灯光控制。

[3]Controller is needed for D-RGB functions.
Für D-RGB-Funktionen ist ein Controller erforderlich.
Un contrôleur est nécessaire pour les fonctions D-RGB.
Se necesita un controlador para las funciones D-RGB.
需要用控制器才能使用D-RGB功能。

1 PREPARE MAINBOARD

Motherboard vorbereiten | Préparer la carte mère | Preparar la placa base | 准备主板

INTEL 115X | 1200 | 1700 | 1851

PROCEED TO STEP 2. ›

01

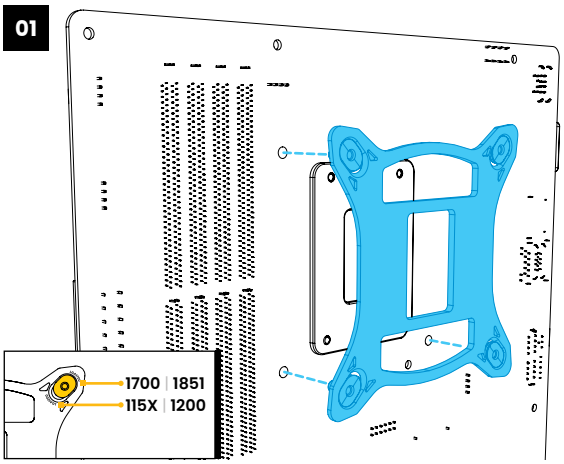

02

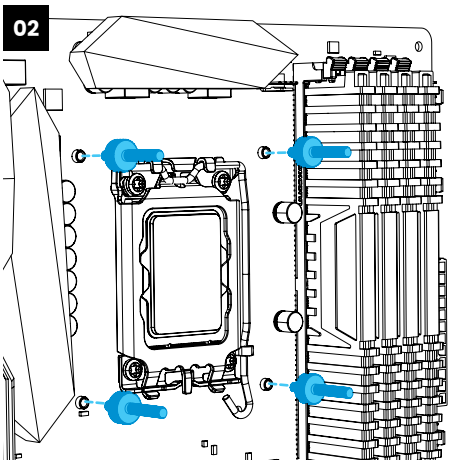

INSTALL
115X | 1200 Stand-off 4x

OR

INSTALL
1700 | 1851 Stand-off 4x

ATTENTION

Check the stand-off texture to make sure you got the correct socket stand-off.

DE Überprüfen Sie die Abstandshalterstruktur, um sicherzustellen, dass Sie den richtigen Sockelabstandshalter haben.

FR Vérifiez la texture de l'écartement pour vous assurer que vous avez obtenu l'écartement correct de la douille.

ES Verifique la textura del separador para asegurarse de obtener el separador de enchufe correcto.

CN 检查支柱纹理，确保使用正确的支柱

AMD AM4 | AM5

PROCEED TO STEP 2. ›

01

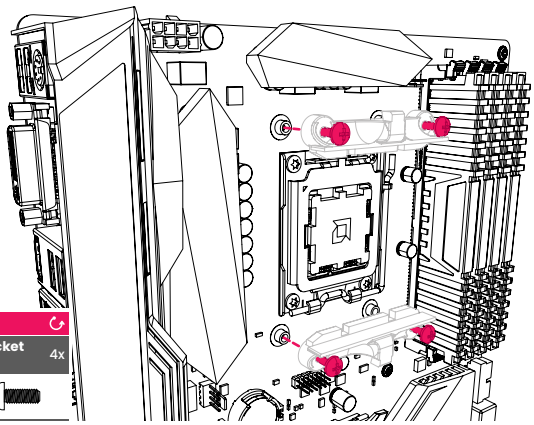

REMOVE
AMD Bracket Screws 4x

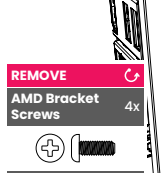

02

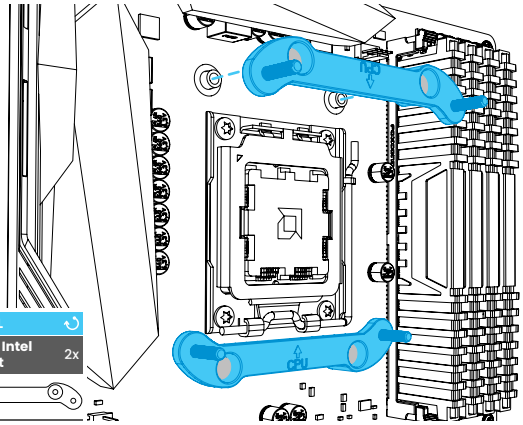

INSTALL
AMD to Intel Bracket 2x

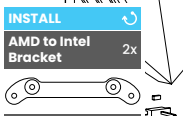

2 INSTALLING CPU BLOCK

CPU-Block installieren | Installation du bloc CPU | Instalación del bloque de CPU | 安装CPU模块

LCD SCREEN POSITION

Position des LCD-Bildschirms | Position de l'écran LCD | Posición de la pantalla LCD | 显示屏位置

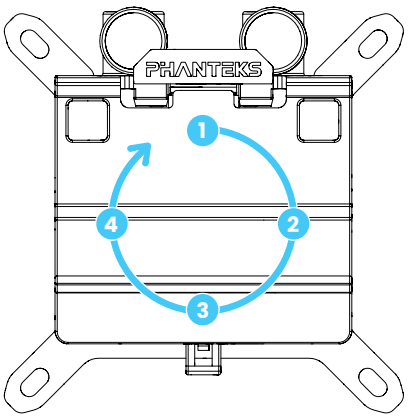

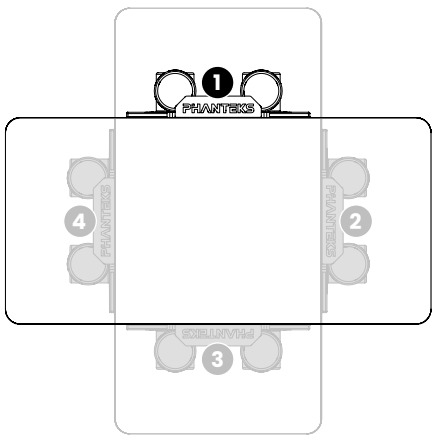

SECURE CPU BLOCK
Sicherer CPU-Block | Bloc CPU sécurisé | Bloque de CPU seguro | 安装CPU模块

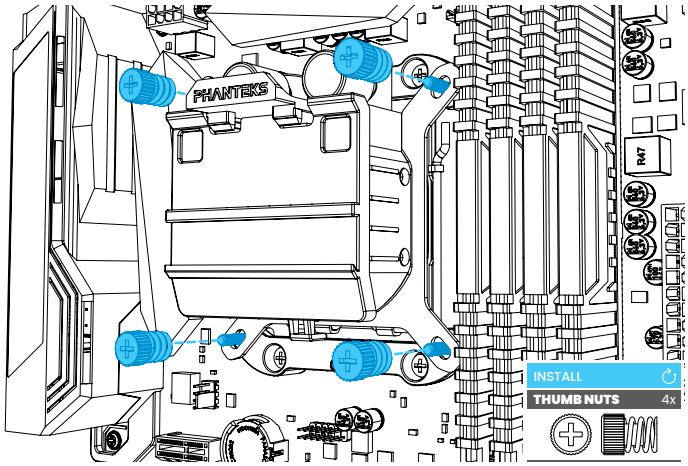

CONNECT CPU BLOCK
CPU-Block anschließen | Connecter le bloc CPU | Conectar el bloque de CPU | 连接CPU模块

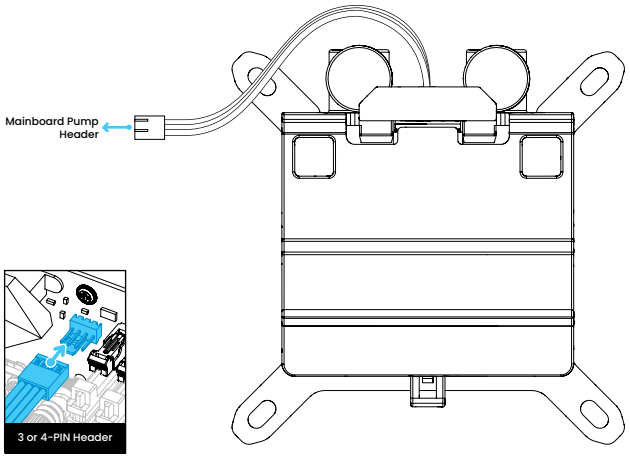

3 MOUNT THE RADIATOR AND FANS
Montieren Sie den Kühler und die Lüfter | Montez le radiateur et les ventilateurs | Monte el radiador y los ventiladores | 安装散热器和风扇

A

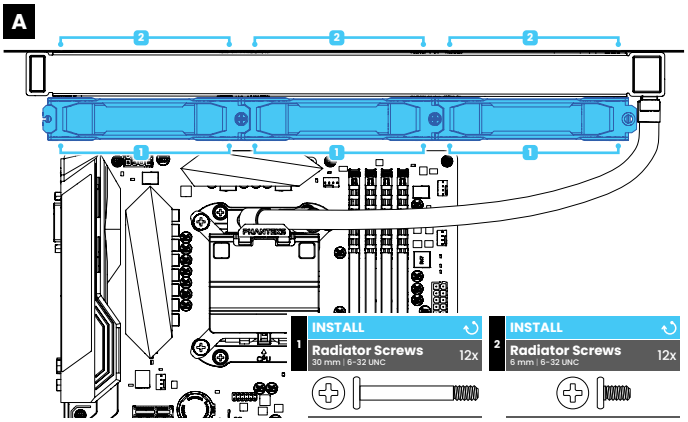

B

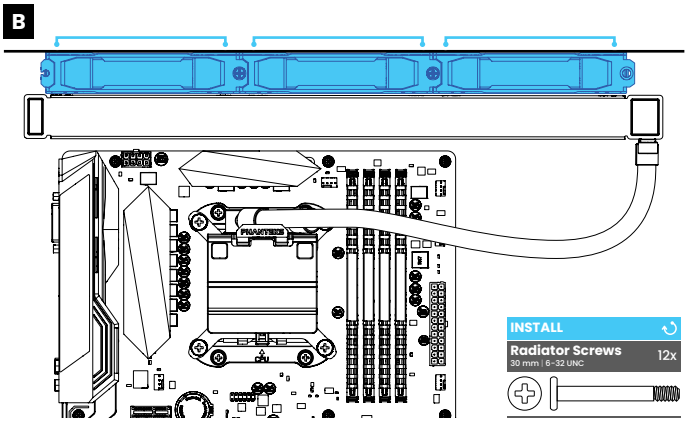

4 INSTALL SCREW COVERS
Schraubenabdeckungen anbringen | Installer les cache-vis | Instalar cubiertas de tornillos | 安装螺丝盖

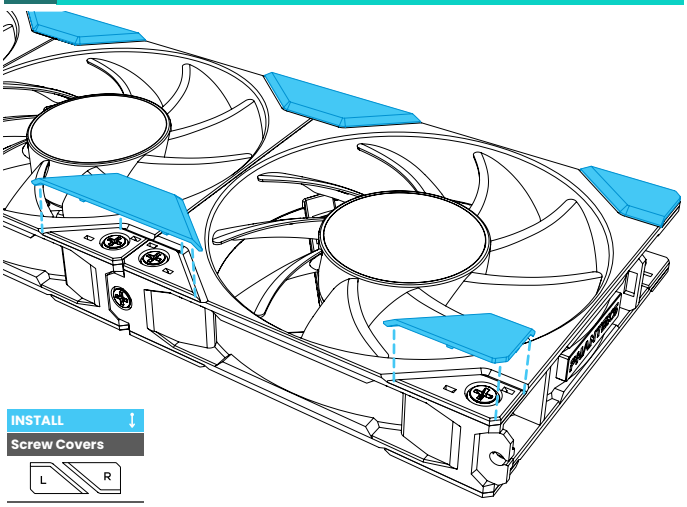

5 CONNECT FAN CABLE
Lüfterkabel anschließen | Connectez le câble du ventilateur | Conectar el cable del ventilador | 连接风扇线材

LINQ6 FAN CABLE[3]
LINQ6 Lüfterkabel | Câble de ventilateur LINQ6 | Cable de ventilador LINQ6 | LINQ6风扇线材

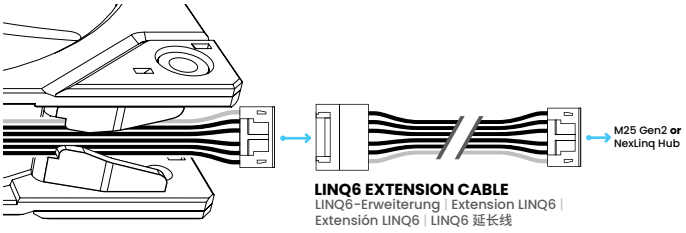

OPTIONAL LINQ6 ADAPTER
Optional LINQ6-Adapter | En option adaptateur LINQ6 | Opcional Adaptador LINQ6 | 可选项 LINQ6 转接线

6 LCD MODULE

LCD-Modul | Module LCD | Módulo LCD | 液晶显示模块

INSTALL USB CABLE

USB-Kabel installieren | Installer le câble USB | Instalar el cable USB | 安装USB线材

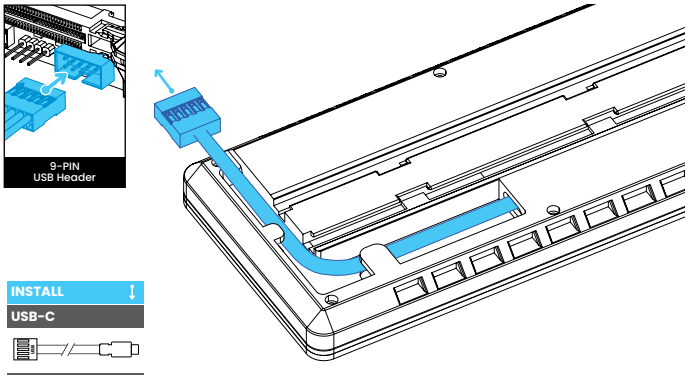

LCD POSITION

LCD-Position | Position de l'écran LCD | Posición de la pantalla LCD | 显示屏位置

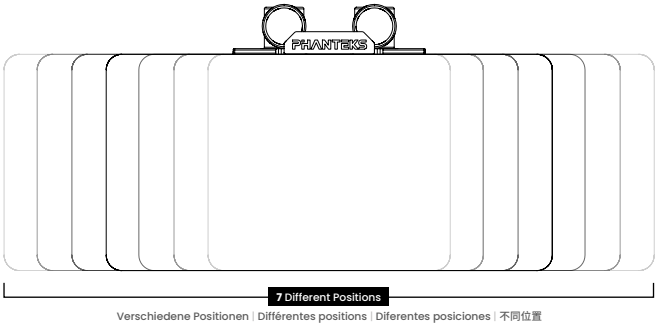

Verschiedene Positionen | Différentes positions | Diferentes posiciones | 不同位置

INSTALL LCD MODULE

LCD-Modul installieren | Installer le module LCD | Instalar el módulo LCD | 安装显示屏模块

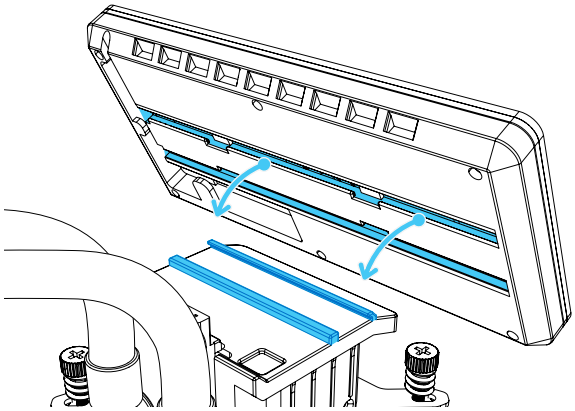

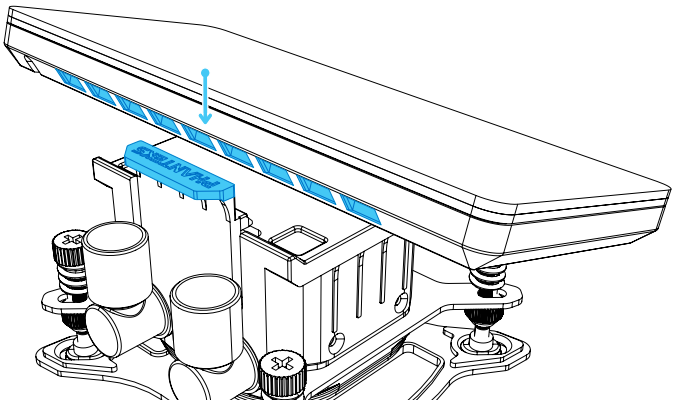

7 INSTALL TUBE CLIPS

Rohrschellen montieren | Installer les clips pour tubes | Instalar clips de tubo | 安装管夹

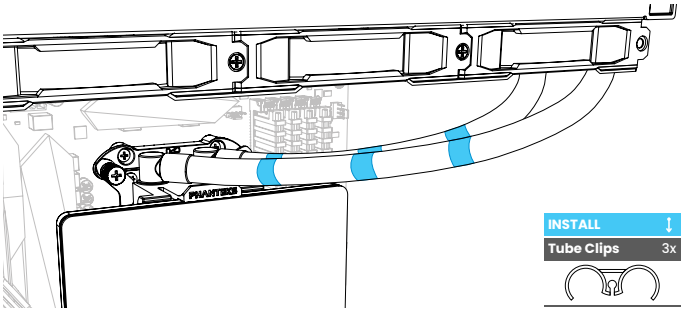

RESET LCD SCREEN

Rohrschellen montieren | Installer les clips pour tubes | Instalar clips de tubo | 安装管夹

HOW TO RESET THE LCD DISPLAY

1. Disconnect the LCD screen from the AIO pump module
2. Disconnect the USB-C cable
3. Press and hold the reset button while reconnecting the USB-C cable
4. Release the reset button after LCD lights up
5. The LCD screen is reset successfully

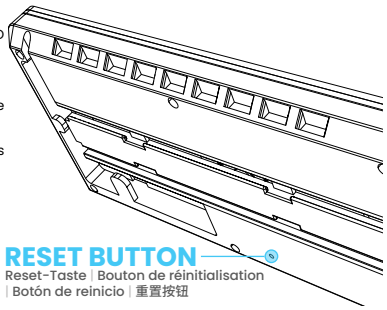

SAFETY INFORMATION

Sicherheitsinformation | Information de sécurité | Información de seguridad | 安全信息

In order to achieve maximum safety, we suggest that you adopt the following guidelines:

1. Place the product on a clean and stable surface that allows adequate air ventilation.
2. Don't use or place the product and any of its components near water, moisture, or other wet surfaces; or place the product near any heat, open flame, or other hot surfaces such as radiators, stoves, fireplaces, and candles.
3. Use caution when operating the desktop PC to avoid electrical shock or damage, such as unplugging the power supply during thunderstorms, ensuring that your hands are dry before using (and handling) the desktop PC, keeping it away from any source of liquid and/or heat source, and using all other reasonable precautions needed under the circumstances.
4. When connecting external devices to your desktop PC, carefully plan how the wires will be placed. Protect any connected cables from being trod on or pinched, particularly at plugs, convenience receptacles, or the point where they exit from.
5. Take extra caution when handling/removing/reattaching glass components. Once removed, place the glass component on a stable surface first before proceeding.
6. When unplugging any connected devices and/or cables, always pull the cable or device's plug or connector. Don't forcefully tug on its cord.
7. Don't place any heavy items on top of the product.
8. Make sure that the desktop PC is off, unplugged from the outlet, and that all connected devices are powered off and unplugged (if any) before installing or uninstalling any internal component to and/or from the desktop PC or product.

NOTE ON DISPOSAL

The **WEEE symbol** indicates that this product must not be disposed of with normal household waste. Through the correct disposal of this product, you will help protect the environment. For more information on the disposal of this product, please contact your local municipality, your waste disposal service or the shop where you purchased the product.

Phanteks Group Inc.
11F., No. 150, Jian 1st Rd.,
Zhonghe Dist.
New Taipei City 235

Importer EU
Axpertec Int. B.V. (EU)
Sydneystraat 33
3047 BP Rotterdam
The Netherlands

Importer US
Axpertec Inc. (US)
20465 E Walnut Dr. N
City of Industry, CA 91789
USA